MAIDSTONE MODEL ENGINEERING SOCIETY

Christmas 2020

www.maidstonemes.co.uk

Maidstone Model Engineering Society

Christmas 2020 Newsletter

Your Committee

The committee exists to serve the club, to look out for the clubs interests and to make decisions on behalf on the club and its members.

Each committee member has volunteered and been elected by the membership at the AGM.

We are you're committee, if you would like a point raised, either write/email to Martin, or talk to one of us and we can raise an issue on your behalf.

Vice Chairman - Chris Hawkins

Secretary - Martin Parham

Treasurer - Edgar Playfoot

Press Officer - Luke Bridges

Tom Parham

Sue Parham

John Hawkins

Andy Bridges

Chris Williams

Jack Ruler

** *Vacancy* **

Cover photo: The club Enterprise got an outing as well this year

Luke's Spot

We finally made it to the end of what promises to be a year to mostly forget.

Roll on 2021 and hopefully more normal times ahead.

On a personal front, my workshop has now taken shape externally, mostly weatherproof for the winter, waiting on an opportunity to fit flooring and internals, lighting, power etc etc but fingers crossed for a functioning workshop by this time next year!

A question from me, has anyone reading this ever looked at or measured their axle weights? I know some may have done in the past, but this has come out of a recent discussion online. Trojan runs and pulls three loaded trolleys round our aluminium track well with 26kg per axle, but I would be interested what others have on their driving wheels as we are aiming to increase our Polly 6 up to similar to Trojan's axle weight too.

I hope you find something of interest in this issue, if not and there is something you would like to see, please e-mail me at luke.bridges 'at' gmail.com and I'll see what I can do, likewise if you have something or photos of interest then please do send them in.

All that's left for me me to say, while on the run up to Xmas in mine and Amy's first home, is to wish you all a safe and

Join our members page at facebook.com/groups/Maidstonemes
And like our public page at facebook.com/maidstonemes

At the park

General Works - Jack Ruler

The replacement manhole cover has been completed and painted and adjustments to the lifting table made. The new step outside the gates has been modified too. The leaking roof (more about that over the page) has been investigated and quotes sought for a replacement. High ground areas near the track had been dug out to restore running clearances for trollies. More green paint is in stock. The shadow board in the coal store has been updated. Anti climb paint has been reapplied to the roof edges and doors have been strengthened. A fund raising appeal was suggested (and has done well, see page 7….)

Household and Catering - Sue Parham & Chris Williams

The photo wall will be reinstated but in new and matching frames.

Public Running - Sue Parham & Chris Williams

Nothing to report.

Safety - Tom Parham & John Hawkins

Nothing to report.

Permanent Way - Chris Williams & Peter Kingsford

The 3 1/2" rail has been tweaked where it was causing a problem, although levels are still causing issues in some locations.

Fuel - Tom Parham

More coal will be brought down.

Club Locos - Tom Parham

Enterprise - Available for use

Gertie - All wheels have been removed for attention and renovation by John H.

SNCF - Available for running.

Doris - All water hoses need replacing between loco and tender.

Rolling Stock - Andy & Luke Bridges

Chris H has taken the bogies from Graham's trollies for attention to the wheel profiles.

Club Lunch

The annual club will be postponed for now, an alternative time and date will be announced later.

Index of Articles

An idea suggested to me recently, which I am going to undertake, is to produce and periodically update - an index of articles that have ever appeared in the MMES newsletter.

This will probably take the form of a spreadsheet containing article title, author and issue - it could be expanded eventually if needed.

This was suggested as we have a number of interesting technical articles, or articles of historical interest by numerous authors over the years including many by Jim Ewins which get lost among the long list.

These articles show, amongst other things, the development of the club with things like the Trolley store being constructed, the current bridge being built, club locos being overhauled or added to the roster.

I'm aiming to have this put together in January sometime and updated either annually or with every issue.

Also hopefully next year will be busy enough for the return of the short news flashes in between main issues.

A Message from the Treasurer

Like many individuals and businesses, this year has been devastating for the finances of our Society. Our Society relies heavily on the income raised from our miniature railway track and the rides for the general public. This year 2020 we have had no income from our track leaving the only income from us by membership fees and donations. Fortunately our Society over many years has been prudent and been able to put some funds aside which have now been drawn on.

But sadly Covic-19 is not our only problem. Recently it has been discovered that our clubhouse roof is leaking, possibly has been for several years, rotting the decking and timbers beneath. The extent of decay is yet unknown but it is clear that the roof deck and covering urgently needs complete renewal. We have been inviting roofing contractors to price for the work and the figures coming in are staggering. Your Secretary has been able to obtain a small grant to help us over this year but this is far short of the funds we are going to need for this work.

It is for these reasons that your subscription for the new year is going to be vital to help keep our Society solvent together with any donation you can afford. Lets all hope that with immunisation on the horizon, we can all look forward to a near normal 2021.

Edgar Playfoot

Hon. Treasurer

Subscription Renewals

Membership renewal forms should have been received with this newsletter, if extras or replacements are required please contact the secretary Martin Parham

Clubhouse Roof

As mentioned by Edgar, we are raising funds to get the club-house roof replaced.

A GoFundMe page has been setup which has had a fantastic response so far.

The current total (12th Dec) is at

£6,114 raised of £5,000 target

This fund raiser can be accessed at

https://gf.me/u/zbmkct

or the longer version

https://www.gofundme.com/f/maidstone-mes-replacement-roof

And I've even made a QR code version

I know many members have already contributed and many thanks to all of you!

Sharing

Thanks to Roger for sending this in - and thanks for putting together the last club night quiz!!

He ordered one hamburger, one order of French fries and one drink. The old man unwrapped the plain hamburger and carefully cut it in half. He placed one half in front of his wife. He then carefully counted out the French fries, dividing them into two piles and neatly placed one pile in front of his wife.

He took a sip of the drink, his wife took a sip and then set the cup down between them. As he began to eat his few bites of hamburger, the people around them kept looking over and whispering. You could tell they were thinking, 'That poor old couple - all they c an afford is one meal for the two of them.'

As the man began to eat his fries a young man came to the table. He politely offered to buy another meal for the old couple. The old man said they were just fine - They were used to sharing everything.

The surrounding people noticed the little old lady hadn't eaten a bite. She sat there watching her husband eat and occasionally taking turns sipping the drink.

Again the young man came over and begged them to let him buy another meal for them. This time the old woman said 'No, thank you, we are used to sharing everything.'

As the old man finished and was wiping his face neatly with the napkin, the young man again came over to the little old lady who had yet to eat a single bite of food and asked 'What is it you're waiting for?'

She answered . . .

'THE TEETH.

MMES Xmas 2020

S	E	T	N	A	J	O	R	T	R	I	T	G	S
E	E	L	T	R	E	V	I	T	H	I	C	K	P
L	M	A	I	D	S	T	O	N	E	E	O	R	E
D	N	E	S	T	E	P	H	E	N	S	O	N	V
D	D	O	R	I	S	N	E	A	Y	E	G	O	A
I	E	N	U	F	F	O	I	M	H	C	R	T	N
R	O	T	S	I	G	T	T	U	A	R	E	G	S
C	G	L	R	R	E	H	T	R	M	A	S	N	B
F	O	S	T	E	R	G	A	R	I	V	L	I	U
S	R	O	P	B	T	I	E	A	L	E	E	L	R
O	D	B	I	O	I	R	B	Y	T	N	Y	L	R
E	O	E	U	X	E	B	H	C	O	O	G	I	E
O	I	I	E	R	N	F	N	S	N	G	G	B	L
C	U	R	C	L	Y	R	I	G	A	R	R	E	T

STEPHENSON
BURY
TREVITHICK
LEEDS
FOSTER
BILLINGTON
GOOCH
MAIDSTONE
TROJAN
HAMILTON
CRAVEN
DORIS
FIREBOX
BRIGHTON
RIDDLES
EVANS
GARRET
MURRAY
GRESLEY
BEATTIE
GERTIE
CURCLY
BURREL

Play this puzzle online at : https://thewordsearch.com/puzzle/1755706/

A Members Life for Me - Amy Dixon

Hi all! I cannot believe I am saying this, but I have been a member of MMES now for 2 years, 9 months and 9 days (ed: as of 12th Dec)– perks of keeping my membership card in my purse haha!

When Luke and I first started dating I vowed I wouldn't become a train nerd or go to Mote Park with Luke as "it was just far too nerdy for me" … Well, I think it is safe to say that view went out the window yonks ago, especially as Luke asked me to marry him on the Rail Road at Disneyland Paris! Anyway – I can't remember what changed that or made me want to sign up as a member but I think it was mostly due to the fact that I didn't count as an "associate member" through Luke, and I wanted to learn how to drive electric/petrol. As much as I tried to put it off, the time came that Luke was determined he would get me driving a loco. So out came Gertie, the loudest engine I think known to man/women! At first I was absolutely petrified, I think just because of how loud Gertie is, but then by the time I had put petrol into her, found her "biting point" and started her (my muscles still flinch to this day at the thought of starting Gertie's lawn mower engine!). Many, many weeks later I was very comfortable driving round the track before passenger hauling, to the point one week Luke and I did a mini mock test and I had to do an emergency stop on the track which was rather interesting! After a while I put in to the committee to become a solo driver which got accepted. I'm not ready to apply for passenger hauling as I am more than happy to just poodle round the track on my own. Along came Christmas 2019, Luke gifted me one of his engines, remodelled and called Peggy after my late Great Grandmother. I remember talking to her not long before she died that Luke and I was

going to the Great Dorset Steam Fair and that I was apprehensive. She told me to embrace it and enjoy it on her behalf, I think that's one of the reasons why I wanted to get into this hobby so much as it's almost in honour of her and makes me feel closer to her and my Grandad. Anywho – lets get off this sad subject! Peggy has now been modified and tailored to me even further; I 3D printed a Minnie Mouse head, hand painted it and she now lives in Peggy's chimney!

I am now persevering with learning to drive Steam, however, Covid seems

to have different ideas so I haven't had many opportunities to practice this year. I have started to learn to drive on Luke's Trojan and so far, feel I am making great progress! In my Dad's shed I have a Don Young Railmotor (thank you Luke for reminding me!). Once Luke completes the workshop, my engine will come home, and work will commence (at some point!).
I have and really enjoyed being a member of MMES. I have taken on creating the Quiz nights and getting a PowerPoint ready with roughly 100 questions plus table rounds. Unfortunately due to Covid the Quiz night itself won't be happening this year but instead I have done (I think) 3 quizzes now… On the third it did start getting hard, finding questions I hadn't used before or coming up with different rounds that I hadn't used before but I think they were still a great success and made a boring Friday night much more enjoyable! If anyone wants to partake in any more quizzes I am more than happy to put another quiz together! Just let Tom know so we can organise a Zoom night! I have also volunteered to do the money taking previously, it isn't as easy as it looks! I feel for people who haven't done it before, in future (whenever we can get back to public running), maybe the 'newbie' can shadow someone else the week before so it isn't so daunting on their own.

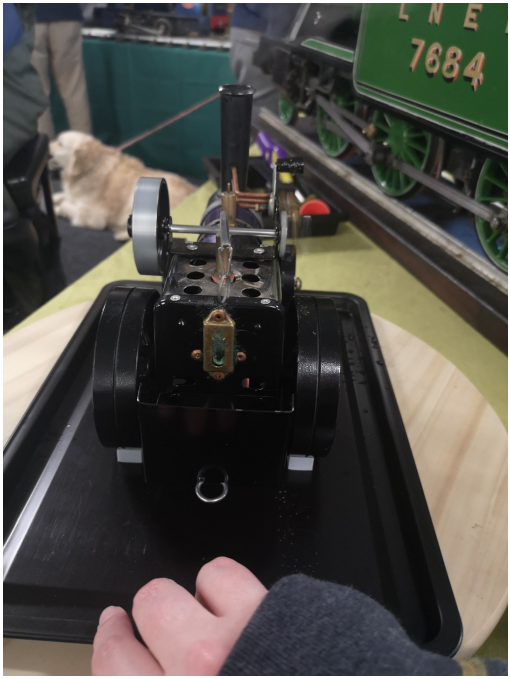

Currently, I am working on (very slowly) another addition to my Mamod collection (only 2 so far). Dave Deller very kindly gave me his Mamod TE1A. I have sanded it down and (I believe) sprayed the boiler and the first layer of black on to the wheels. What with moving in to our first home back in February and then the pandemic, I haven't had much chance to continue with the engine (will be called Alison). Once we have a fully operational workshop, I will continue work on Alison and hopefully she will look as beautiful as my previous Mamod I prettied up (and

still in process of finishing) Jeanie which I have written an article about previously (P1 – Winter 2018, Pt2 - Spring 2019's newsletters).

Editors note -
First photo of us at Bodmin General
Second photo of Blue Circle at The Great Dorset Steam Fair
Third photo also at the steam fair
Fourth at Bredgar and Wormshill
Fifth having a steam up at the Detling transport show
Sixth (below) is Amy's Dad Steve having a drive at Family and Friends Day

Turning Accurate Tapers - Roger Vane

I recently needed to turn an accurate taper on the end of a spindle to mount a drill chuck, and thought that the method of setting the taper angle might be of interest to those members who may have a similar job to do, and have not come across this method, relying instead on 'trial and error'. I claim no originality for this method, only a good memory, as it dates back to my apprenticeship days and that was more years ago than I wish to admit to.

So, how to go about setting the taper angle? How do you measure it? Taper turning can be achieved by swivelling the top slide or setting a taper turning attachment if you have one, but whatever method you use you will still have to set it accurately to achieve the desired result. In my case this had to be a tight-fitting taper, with no wobble and which once assembled into the drill chuck will stay in position, whilst enabling the chuck to operate with minimal run-out.

This method can be used to set-up to turn any relatively shallow angle including Morse tapers, taper plugs and reamers (such as drain cocks), as well as the taper for mounting a drill chuck as covered here. I say 'relatively shallow angle' as the method uses a 'plunger-style' dial gauge as the means of measurement, and so the maximum travel of the gauge spindle becomes a factor in the degree of angle that can be set.

Although I would probably use a taper turning attachment for turning even the short taper required for the small chuck (as it's easier to set precisely), I appreciate that this is not an option open to everyone, so I have given a description using the top slide.

The dial gauge

The first requirement is for a dial gauge fitted with an 'elephants' foot' - mine is shown in **Photo 1**. The elephant's foot is simply a disc with a threaded stem to suit the dial gauge, and it means that setting to exact centre height is not necessary as the flat takes care of any height deviation. The thread for the elephant's foot is normally either M2.5 for a metric gauge or 4-48 UNF for an imperial gauge (although 6BA is so close that it should fit).

1. The DTI holder for the quick-change tool post

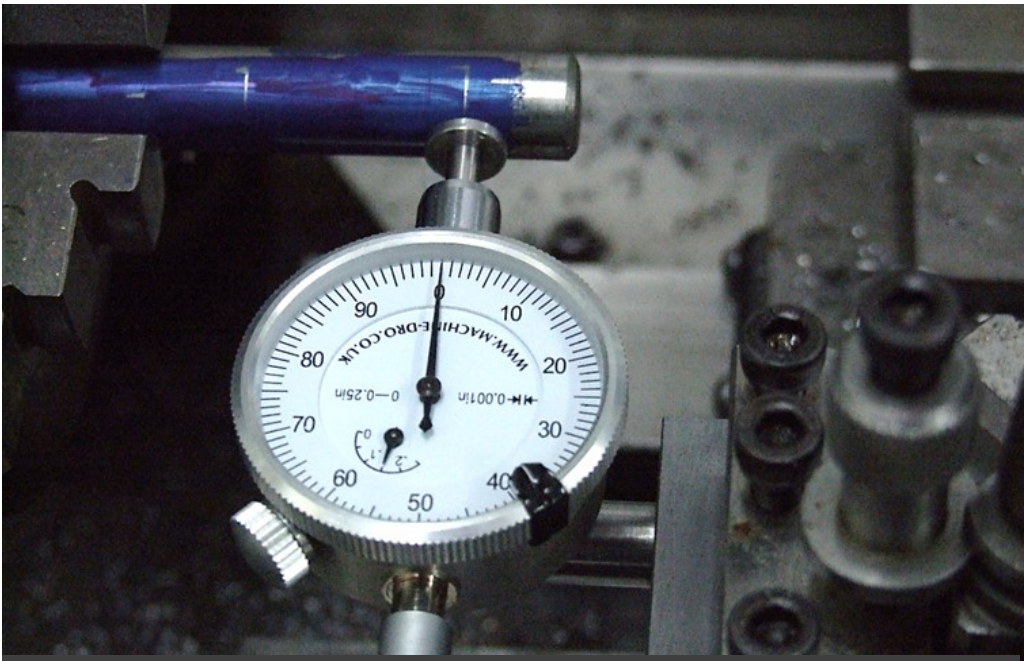

2. Setting the top slide for taper turning the spindle - DTI zeroed at the small end

Setting the taper

Firstly, we need to identify the taper required and more importantly, the 'half angle' taper per inch (or mm if working to metric dimensions).
The spindle for the drill chuck that I had to machine had a JT0 taper, the dimensions for which are shown in the table.
With this method we are adjusting the top slide deviation over a distance of 1" along the lathe axis (0.0493" for the included angle and therefore the top slide should be set to achieve a deviation of 0.02465" for the half angle

Taper	Large End	Small End	Length	Taper/ Inch	'Half' Taper/ Inch	Angle from Centre
JT0	0.2500	0.2284	0.44	.0493	.02465	1.4117

when machining the taper).
A setting bar is also needed - this is simply a length of bar marked with two lines scribed at 1" apart - it is used when setting the top slide angle. It means that it is easy to see the travel along the bar as the top slide is advanced, rather than having to count turns of the top slide handle - simply set the top slide lead screw dial to zero when the DTI is at the first position, and then go to the second position. An error in top slide travel of 1 turn is easy to spot. **Photos 2 and 3** show the general idea.
To set the taper, start off by swinging the top slide round by just under 1½ degrees, and chucking the setting bar. Then set the dial gauge so that the elephant's foot rests squarely on the test bar. There will be no errors due to chuck run-out as the chuck will not be rotating when setting the taper angle.
It is also necessary to calculate the top slide travel, which will be greater than 1" due to the angular effect. We are looking for a deviation of 0.02465" over 1.000" travel along the lathe axis. To move the top slide by 1.000" is not absolutely correct as the top slide is travelling along the hypotenuse (good old Pythagoras). At very shallow angles like this, the length is almost equivalent to the 1" travel along the lathe axis. I did set

3. The top slide and DTI have now been moved 1.000” - note the difference in readings

4. Turning the spindle taper

5. Drill chuck fitted to tailstock drilling attachment

the CAD to 5 decimal places and measured a deviation of just 0.00031" – and it's fairly academic as I doubt that any of us can achieve the fourth and fifth decimal places on the top slide movement. In this case I used a top slide travel of 1.000" to achieve a travel of 1.000" along the lathe axis.

So, move the top slide by exactly 1" to match the scribed lines and note the deviation shown on the dial gauge. The deviation should be 0.02465" – 25 thou being a realistic target. (Small adjustments can be made by just nipping the topslide to prevent rotation and then gently tapping with a lightweight plastic mallet, but not forgetting to lock the angle before taking a trial cut).

Machining the taper

The final setting may well require some trial and error against the chuck, and I found it worth practicing the taper turning on a length of 1/4" diameter bar as a test piece - aiming for the chuck to fit securely. In fact, my chuck fitted so securely that it took a wedge against the 3-jaw chuck to remove it - just by setting with the dial gauge.

Now to machining the spindle itself – at this stage concentricity should be considered and an accurate chuck or collet used to hold the workpiece as appropriate.

Photo 4 shows the taper being turned - the marking blue on the spindle is definitely an aid to seeing exactly how far the taper is progressing. When turning the taper care will be required not to take too big a cut and go undersize. At these shallow angles, even the smallest cut can result in the taper going well undersize, so small depths of cut really are the order of the day here.

I'm pleased to say that the new chuck locked on straight away with no problem, as seen in **Photo 5**. Getting it off again could be a problem though.

Luke's note - Any articles are always welcome, on almost any subject, its what keeps the newsletters interesting. Maybe its something that has come up in the workshop lately, a project beginning or continuing or just some thoughts, all are welcome!

LEONARD (LEN) FRANCIS PARHAM
10/11/17 - 6/10/20

Many of you will probably be thinking you recognise the surname but cannot recall seeing the person at the club. Yes, it is Martin's Dad, Tom's grandfather, and of course my father-in-law. He had been a paying member for the last 51 years, as he joined in 1969 so that Martin could be part of the club, Martin being too young at the time. He bought Martin his first locomotives to run at the Park, a 3½" Princess Marina and a 5" Speedy (the latter now in Tom's possession). Len also paid for the construction of our current Clubhouse at the Park in 1971-2, which Martin designed.

Len was interested in all forms of transport. During his life he had participated in motorbike scrambling in the early 1950s, graduating into car racing in the1960s (he won several trophies). He sailed on boats and cruised on ships for his holiday many times, from when he was growing up. Len even owned a yacht for several years, although he rarely took it out and eventually sold it. He loved all forms of travel and flew several times on

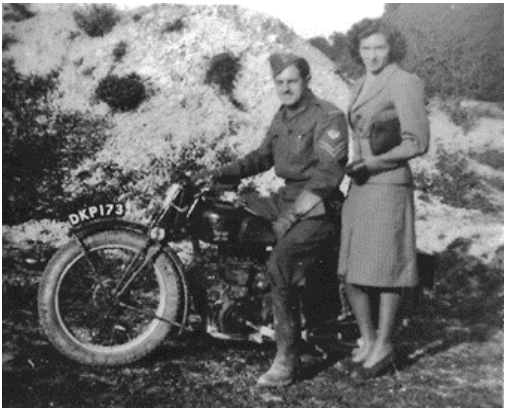

Concorde. It goes without saying that he was of course also keen on trains. In a room at the home he designed, built, and adored, he constructed his own OO gauge layout. He also enjoyed music, ballroom dancing, and photography.

He continued to be a member of the club and would occasionally come to the club, although not in the last few years as his mobility deteriorated with age and a broken hip in 2011. He would go for a ride behind Martin, and somewhere we have a picture of him sitting behind Martin on his Duchess (but I cannot find it at the moment alas). When Martin entered IMLEC at Gravesend in 1994, Len turned up to support him and to take pictures of Martin's run on the Duchess (Martin came 2nd).

Len had three children by his wife, who died in 1971. He had eight grandchildren and fourteen great grandchildren, and he never remarried. He celebrated his 100th birthday in 2017 at a family lunch on the actual day.

All the family (except his eldest son) attended this special occasion, and the two grandchildren who live abroad travelled over to be there. He loved having so many of the family gathered around him, and his telegram from the Queen.

Len is somewhat unique in that he ran and built up the family housebuilding firm in Gillingham for some 83 years. He virtually took this over at the age of 19, because of his father's ill health, and used to tell business contacts he was 29, as he found they would not deal with him if he confessed

his true age. He continued working right up until he became ill just before his death, at the age of 102. His work was his life, he used to say it was all for the family. The family, however, would have liked him to be able to enjoy a retirement, but he never wanted to retire. He was even known to go into work one Christmas Day for a couple of hours!
Sadly, in early autumn this year, he developed double pneumonia from a chest infection and ended up hospitalised. He fought this off but unfortunately pneumonia kept recurring and after a month in Medway hospital he died on the evening of 6th October with Martin and I, and his devoted carer/housekeeper, by his bedside.
He had an amazing and long life. Perhaps the secret of that was the glass of Dubonnet over ice that he would enjoy before his dinner, and the glass of champagne he would enjoy afterwards – and he always used to open the champagne if Lewis Hamilton won a Grand Prix too!
(The eulogy I wrote for his funeral lasted seventeen minutes, so this is a much shorter version.)
Sue Parham
October 2020.

I will also mention briefly that we have learnt that member John Hutt has died, a few days after Leonard Parham, on the 10Th October. We were recently notified by his daughter. I have written to ask her for his life story and pictures so that I can also write about him.
I feel that all our members deserve a tribute in our newsletter when their time comes.
Sue.

Insert +, -, x or / in suitable places on the left side of = so as to make the equation true:

999999999999999 = 1990

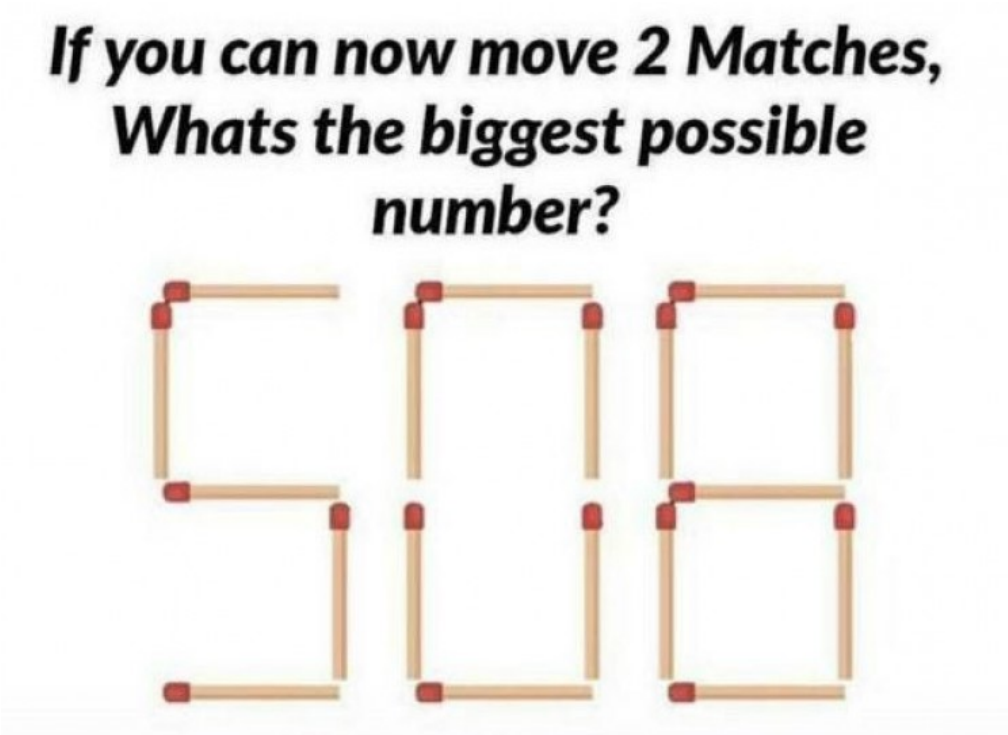

Northumbrian

So it's been a while since we have had a Northumbrian update, and there is quite a bit to update you on.

A lot of firsts for me in this one too - machining cylinders, ports, slide bars a cross-head, smokebox, riveting, making hinges and rolling material.

So to recap, at the end of last year it was a rolling chassis without keyed or properly attached front wheels, complete slip eccentric valve gear and a part machined cylinder.

The first goal was to get it running on air - now I should explain at this point that I'm only talking about running on a single cylinder - my reason for this being that this would be my first attempt at a working steam engine from scratch/castings, no guarantees as to the quality/capability of my machining and taking errors in the frames I purchased into account, that I could make it work and run satisfactorily.

So having already binned the first cylinder attempt, this is the second attempt - luckily at £12 per casting, it doesn't break the bank which is most of the reason for choosing Northumbrian to build.

Up until Ally Pally the cylinder had been faced and bored out, bolted to the frames an the valve port milled out but not yet drilled through, both covers has been made but again not drilled and matching holes not drilled and tapped either. The valve chest was more or less complete minus glands and a cover.

For those unfamiliar with the Northumbrian design, imagine it as Rocket Mk2, more similar to how she appears preserved now at NRM York, cylinders the wrong end (the rear) either side of the firebox. Which on the face of it appears fine but reversed until you consider the steam pipes and exhaust passages.

On a conventional slide valve arrangement the exhaust exits the cylinder block sideways through the rear frame face, then into a t-piece or swept pipe up the chimney. On Northumbrian however the firebox is in the way and the smokebox at the other end. The exhaust passages therefore must go through an interesting double reverse bend, exhausting ultimately out the out valve chest cover. In an alternate universe, passthrough balanced valves would work well here, but a bit too much for me for a first go, perhaps if cylinders ever need remaking…...

The suggested way to achieve this is to drill two ports into the rear face, then to

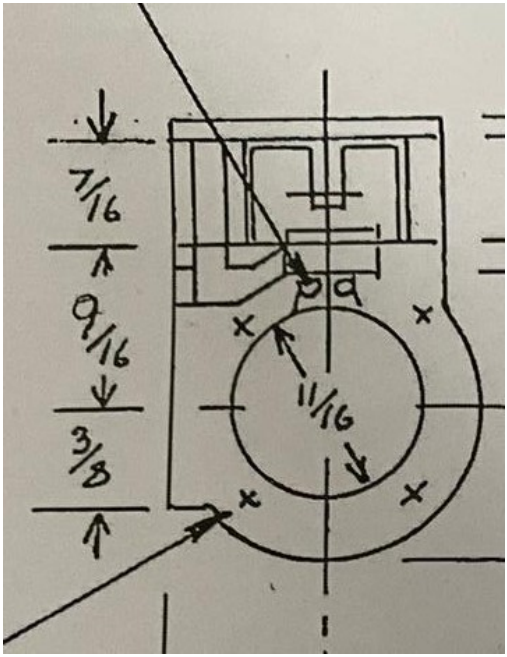

meet them with the usual drilled ports from the valve face, then two more ports down through the valve chest wall to break through into the first two. After which you plug and solder up the first ports drilled in the frame bolting face.

This seemed okay in principle but seemed like hard work, and soldering up the first holes without blocking the ports with solder or dropped plugs was to be avoided. So I did away with the first set of holes from the frame bolting face and adjusted the length of the vertical ports and the length and angle of the ports from the valve, thus meeting at a single angle. Admittedly drilling these new compound angles was not straight forward, but Dad's digital spirit level combined with a tilting vice made it easy enough if nerve wracking. Likewise the steam ports to the bore.

I had been avoiding drilling these for sometime due to the cylinder block being small and not a lot of room for mis-alignment and drilling too far and risk breaking through the bore or a different port. However it worked out well and I seemed to get away with it okay. All ports are drilled 1/8", and involved 8 drilling operations in all to complete. No additional soldering or plugging required.

Having got that done, now had enough courage to complete the cylinder with drilling and tapping the bolting holes for front and rear covers, only 4 on each end needed. The front end in a square upright to the frames, the backend 4 holes rotated slightly to miss the footplate.

With further little work the crosshead was milled from solid, it being a relatively (but tiny) simple rectangle, no shaping as such. Two 1/8" holes through for the slider bars, a central hole to receive the piston rod, and as an extra to the drawings, a tapped whole off centre to the piston rod, to late a bolt in a cut out in the piston rod, physically locking the two together.

Assembling the cylinder, piston and connecting rod highlighted the mistakes by in the frames, they are too short by almost exactly 0.5" which as I'd kept the cylinder block dimensions the same, means the connecting rod needed shortening, the valve

reach rod shortening and the slide bar bracket relieving to clear the rocker which now is not aligned with its other half, more like a 5 o'clock angle rather than 6 o'clock to get the even rocking motion.

After cutting some gaskets for the valve chest and covers it was time to attach the compressor. And at 45 psi she burst into life exhausting oil all over myself having been sitting in the way…… lesson learned……

After an hour or so running, she seized up, completely locking solid.

Oh well, maybe I'd been a bit keen and running her much without proper lubrication. So proceeded to remove the 7 bolts needed to remove the piston. And out it came freely enough, o-ring fine, no scoring, so the piston hadn't locked. It was the slide bars, or rather, the top slider bar.

It took some careful but forceful pressing in the vice to push it right through and out of the crosshead.

Turns out a small blemish had picked up.

After some fettling, easing of clearances, she was re-assembled, re-held in the vice (as if to highlight her small size, I'm running her by clamping the drag beam in the vice jaws, holding her vertically……) and now running again and much happier, smoother and will tick over on 10 psi at the moment, she needs proper gland packings etc yet and a bit of proper running in, a second cylinder should help too…..

But is this as far as I've got? Not at all! By some miracle this year, I've managed to

almost complete the smokebox and make a start on the boiler plates.

As was seen in the last issue, I've received the smokebox parts as laser cut brass to my own CAD drawings. And so in another first for myself, the smokebox wrapper was rolled into almost a full circle, before being soldered around a 0.75" length of the offcut 3" diameter boiler material. The pre-drilled rivet holes needed no opening out for the tiny rivets which are for show only and also soldered in.

The smokebox front, is entirely removable, as on this design, the door is only a small vertically opening flap which only reveals enough to sweep tubes and clear ash. To access the blast pipe, nozzle and pipe work, the whole front can be removed.

This is a achieved by a ring of 1/4" square section soldered again to the rear of the front plate that has been made push fit inside the 3" tube. More rivets for detail also soldered around the perimeter.

The final new thing for now, the tiny hinges and door. The hinge pin is a single length of 1/16" rod, with tiny hinges made from brass stripe bent around the rod and rivetted/soldered to the door and door plate. It all needs a tidy up, deburr and paint, but I'm please with it so far.

And here we end our tale…. Until next time…..

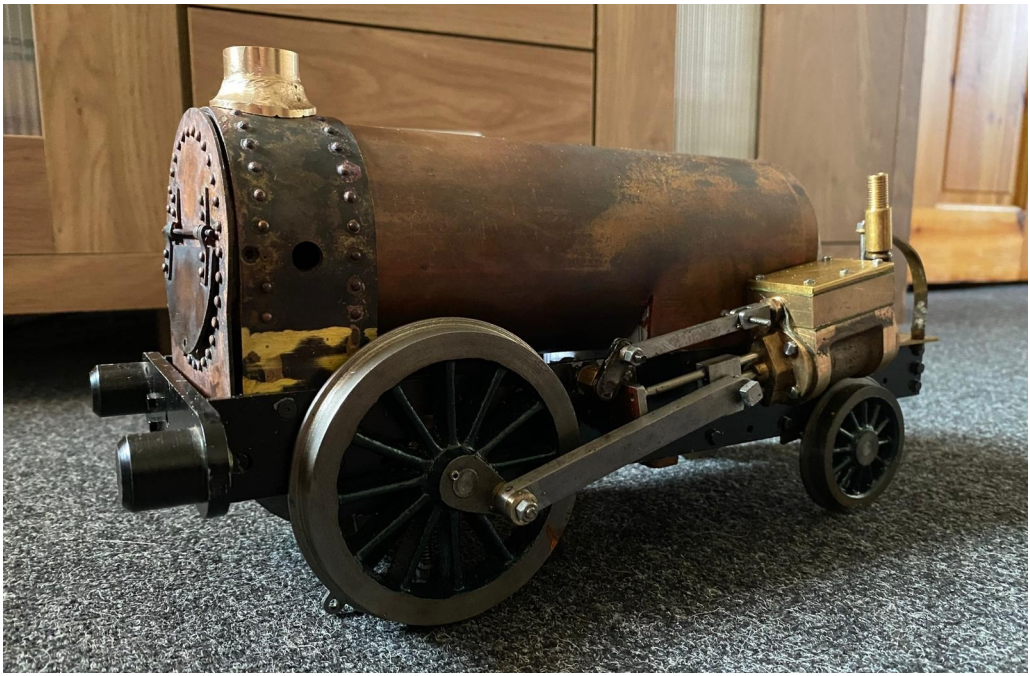

MMES DIARY DATES 2020/2021

IMLEC at MMES *Provisionally* 9-11 July 2021

For the foreseeable future, all club nights will be happening on a Zoom call and details emailed out the week or two before.

If you are not receiving these notifications, or would like them a different way, please let Tom know. If you would like assistance accessing the Zoom calls and meetings, also please let us know and we'll assist where we can.

COVID-19

When attending the club, please remember follow all social guidelines.

Extra signage has been put up at the club and a one way system in operation.

Any persons attending the club must sign in using the sheet on the table inside the clubhouse.

We are watching the governments guidelines and will publicise any changes that need to be made, either imposing or relaxing restrictions.

Stay safe.